Make: CHEVROLET

Model: VOLT

Part Number: ADB32635

Vehicle Manufacturing/Engine:

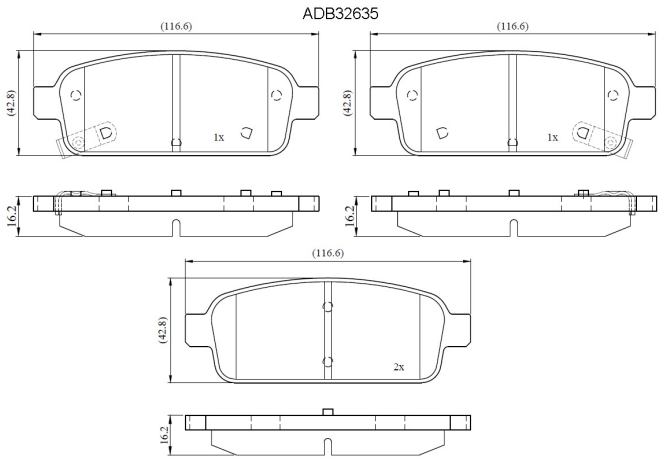

Specifications

Fitting Position	:	Rear
Model Date	:	11-Dec
Or. Caliper	:	
WVA	:	

FMSI	:	D1468
Length	:	116.6
Width	:	42.8
Thickness	:	16.2