ALLIED NIPPON PRIVATE LIMITED
(Formerly known as Allied Nippon Ltd.)
CIN : U34300DL1988PTC030910

Make: CHEVROLET/GMC

Model: TRUCK G2500

Part Number: ADB32771

Vehicle Manufacturing/Engine:

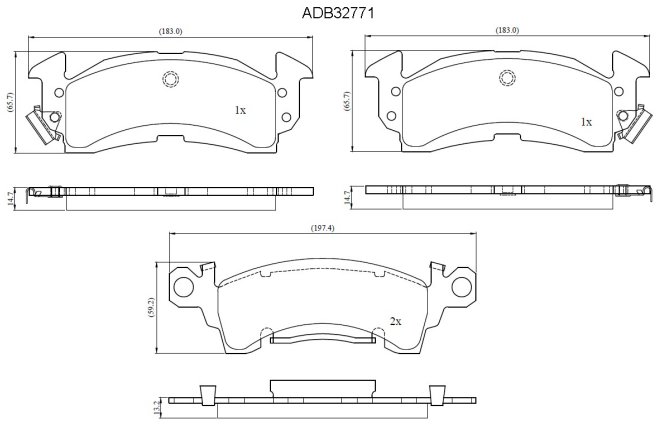

Specifications

Fitting Position	:	Front
Model Date	:	71-95
Or. Caliper	:	
WVA	:	

FMSI	:	728A-D52
Length	:	183/197.4
Width	:	65.7/59.2
Thickness	:	14.7/13.2