Make: CHEVROLET/GMC

Model: TRUCK P2500

Part Number: ADB32771

Vehicle Manufacturing/Engine:

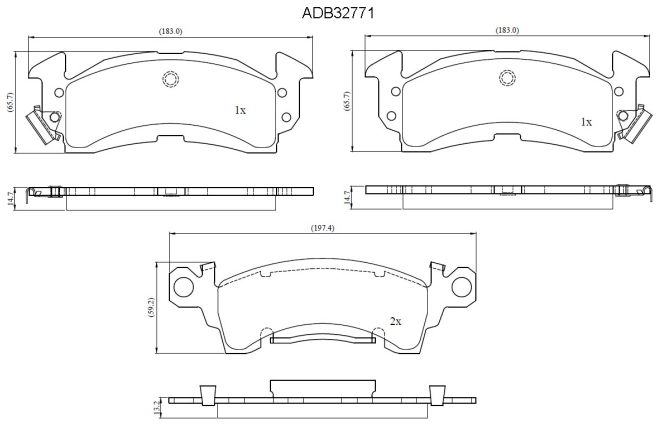

Specifications

Fitting Position	:	Front
Model Date	:	71-89
Or. Caliper	:	
WVA	:	

FMSI	:	728A-D52
Length	:	183/197.4
Width	:	65.7/59.2
Thickness	:	14.7/13.2