ALLIED NIPPON PRIVATE LIMITED
(Formerly known as Allied Nippon Ltd.)
CIN : U34300DL1988PTC030910

Make: CHEVROLET/GMC

Model: TRUCK Silverado

Part Number: ADB32480

Vehicle Manufacturing/Engine:

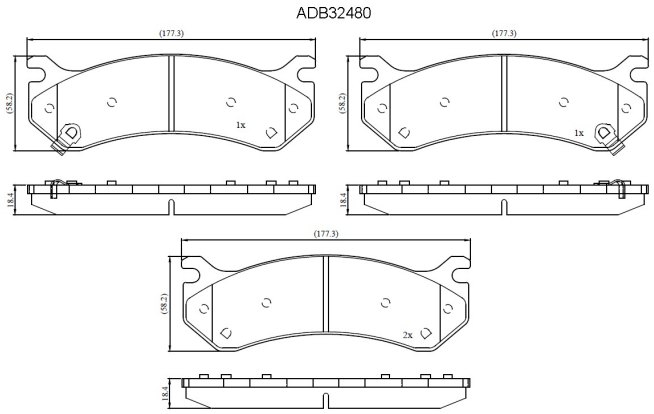

Specifications

Fitting Position	:	Front
Model Date	:	2004-2009
Or. Caliper	:	
WVA	:	
FMSI	:	D785

Length	:	177.3
Width	:	59.2
Thickness	:	18.4