Make: CHRYSLER

Model: Delta

Part Number: ADB03229

Vehicle Manufacturing/Engine:

ADB03229

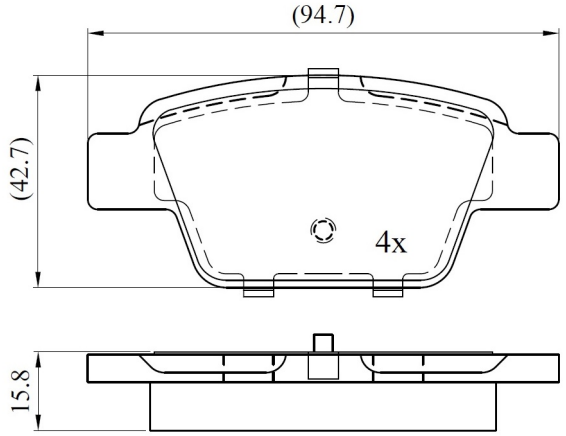

Specifications

Fitting Position	:	Rear
Model Date	:	2011-

Or. Caliper	:	
WVA	:	23714
FMSI	:	
Length	:	94.7
Width	:	42.7
Thickness	:	15.8