Make: CHRYSLER

Model: Pacifica

Part Number: ADB32670

Vehicle Manufacturing/Engine:

ADB32670

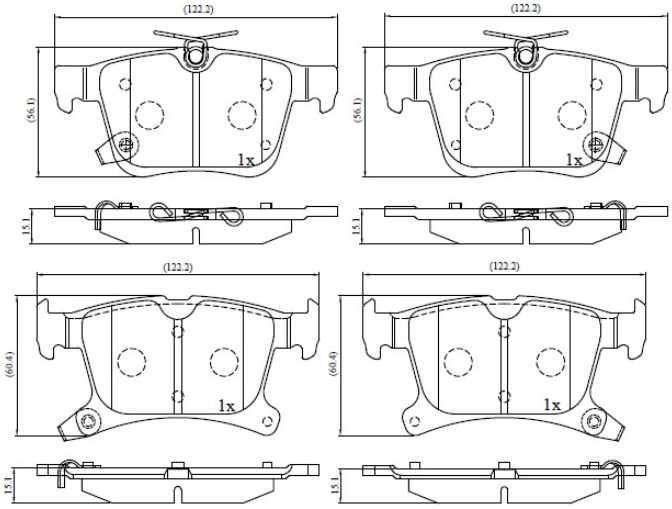

Specifications

Fitting Position	:	
Model Date	:	17-20
Or. Caliper	:	

WVA	:	
FMSI	:	D1901
Length	:	122.2
Width	:	56.1/60.0
Thickness	:	15.1