Make: CITRON

Model: C3

Part Number: ADB01716

Vehicle Manufacturing/Engine:

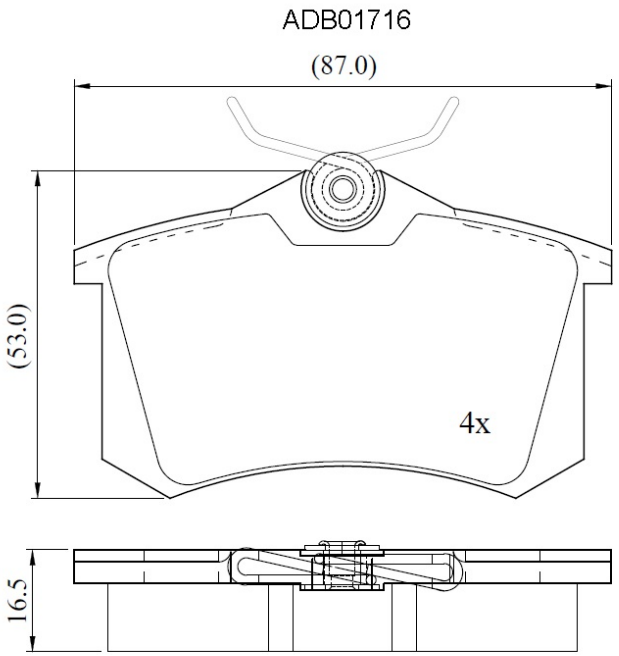

Specifications

Fitting Position	:	Rear
Model Date	:	02/02->
Or. Caliper	:	Lucas
WVA	:	20961
FMSI	:	
Length	:	87
Width	:	53
Thickness	:	16.5