Make: CITRON

Model: C8

Part Number: ADB11158

Vehicle Manufacturing/Engine:

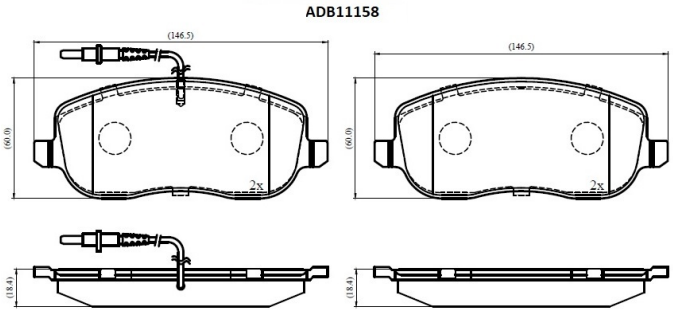

Specifications

Fitting Position	:	Front
Model Date	:	07/02->
Or. Caliper	:	Bosch
WVA	:	2,02,61,20,267
FMSI	:	
Length	:	146.5

Width	:	60
Thickness	:	19