Make: CITRON

Model: DS3

Part Number: ADB03202

Vehicle Manufacturing/Engine:

ADB03202

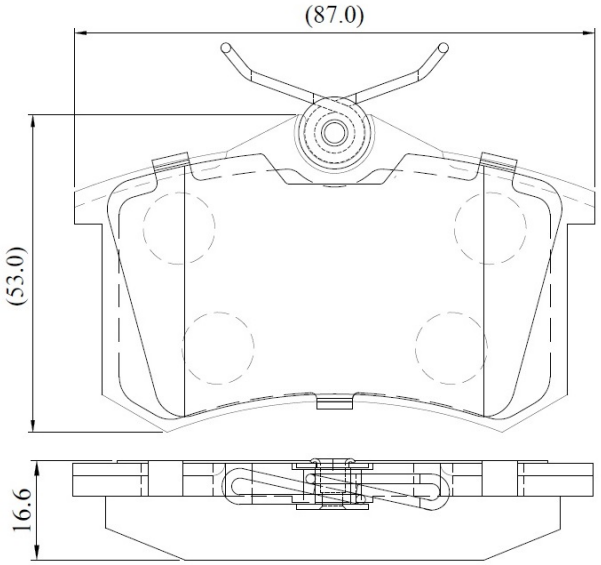

Specifications

Fitting Position	:	Rear

Model Date	:	2012-2015
Or. Caliper	:	
WVA	:	23554
FMSI	:	
Length	:	87
Width	:	53
Thickness	:	16.6