Make: CITRON

Model: Evasion/Synergie

Part Number: ADB21002

Vehicle Manufacturing/Engine:

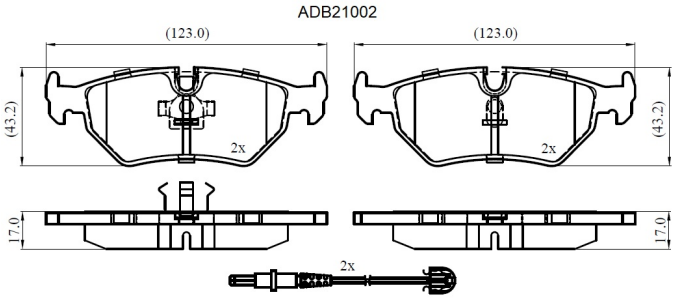

Specifications

Fitting Position	:	Rear
Model Date	:	06/94-07/02
Or. Caliper	:	Ate
WVA	:	21275
FMSI	:	
Length	:	123
Width	:	43.2

Thickness	:	17