Make: CITRON

Model: Xantia

Part Number: ADB0800

Vehicle Manufacturing/Engine:

ADB0800

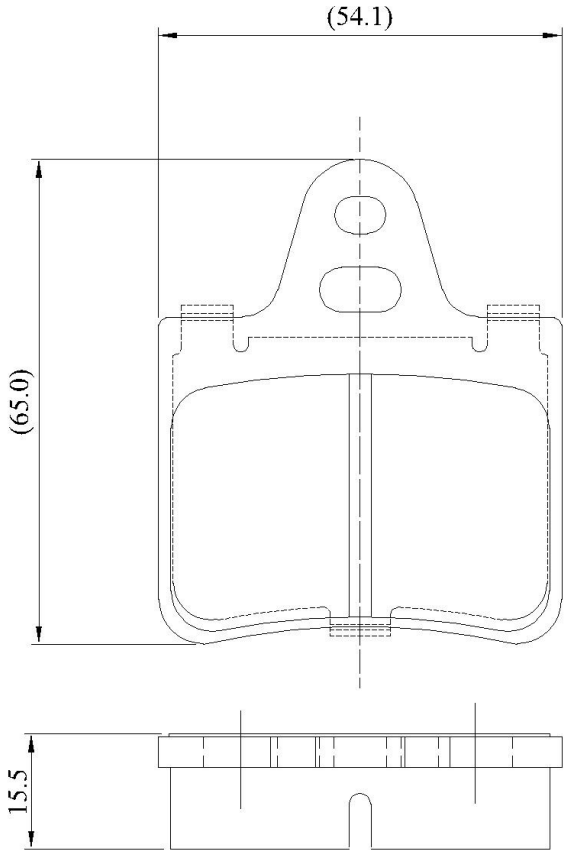

Specifications

Fitting Position	:	Rear
Model Date	:	01/93->
Or. Caliper	:	Citroen
WVA	:	20162
FMSI	:	
Length	:	54
Width	:	65
Thickness	:	15.5