Make: DAIHATSU

Model: Fourtrak / Rocky

Part Number: ADB3439

Vehicle Manufacturing/Engine:

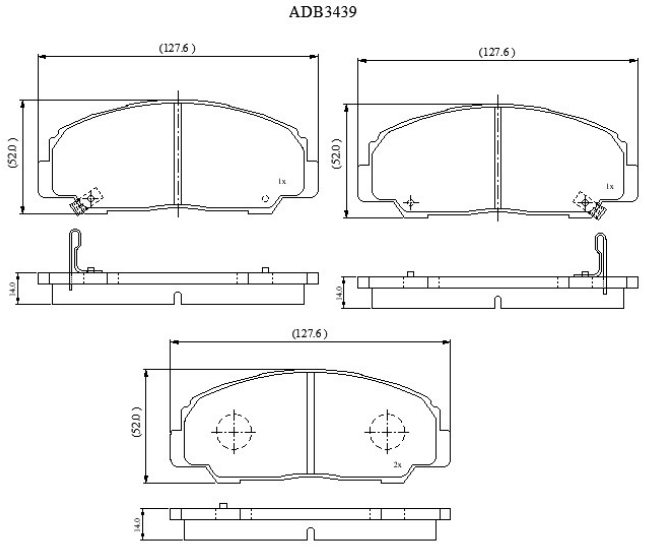

Specifications

Fitting Position	:	Front
Model Date	:	10/89-08/93

Or. Caliper	:	Akebono
WVA	:	21967
FMSI	:	
Length	:	127.6
Width	:	52
Thickness	:	14