Make: DODGE

Model: Durango

Part Number: ADB33293

Vehicle Manufacturing/Engine:

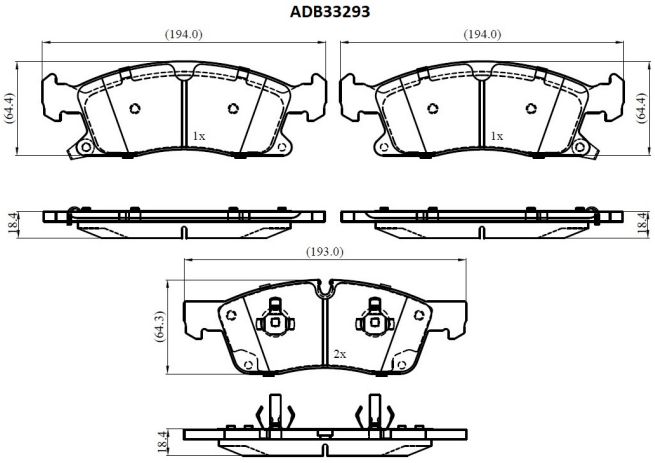

Specifications

Fitting Position	:	Front
Model Date	:	2011-
Or. Caliper	:	
WVA	:	25190

FMSI	:	
Length	:	193.0/194.0
Width	:	64.3/64.4
Thickness	:	18.4