## Make: DODGE

## Model: Durango

## Part Number: ADB33293

## Vehicle Manufacturing/Engine:

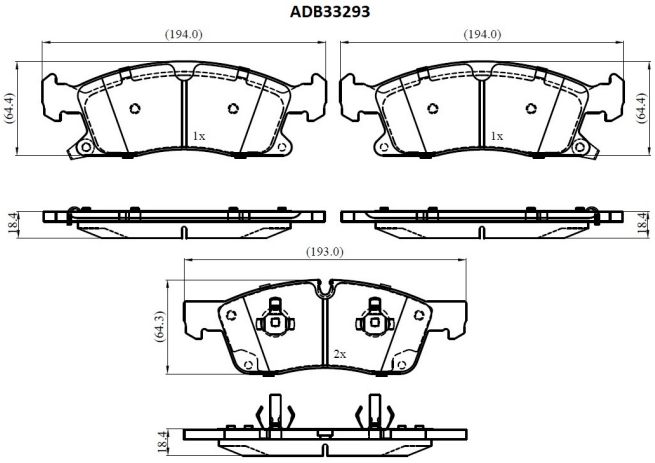


### Specifications

| | | |
|---|---|---|
| **Fitting Position** | : | Front |
| **Model Date** | : | 2011- |
| **Or. Caliper** | : | |
| **WVA** | : | 25190 |

| | | |
|---|---|---|
| **FMSI** | : | |
| **Length** | : | 193.0/194.0 |
| **Width** | : | 64.3/64.4 |
| **Thickness** | : | 18.4 |