Make: FIAT

Model: 500L

Part Number: ADB32139

Vehicle Manufacturing/Engine:

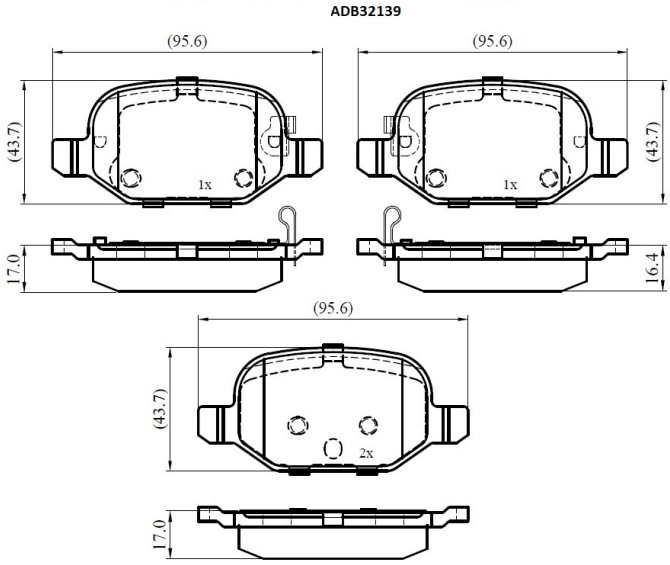

Specifications

Fitting Position	:	Rear
Model Date	:	09/12-

Or. Caliper	:	TRW
WVA	:	25652, 25653,25654
FMSI	:	
Length	:	95.6
Width	:	43.7
Thickness	:	17