Make: FIAT

Model: 500L

Part Number: ADB32141

Vehicle Manufacturing/Engine:

ADB32141

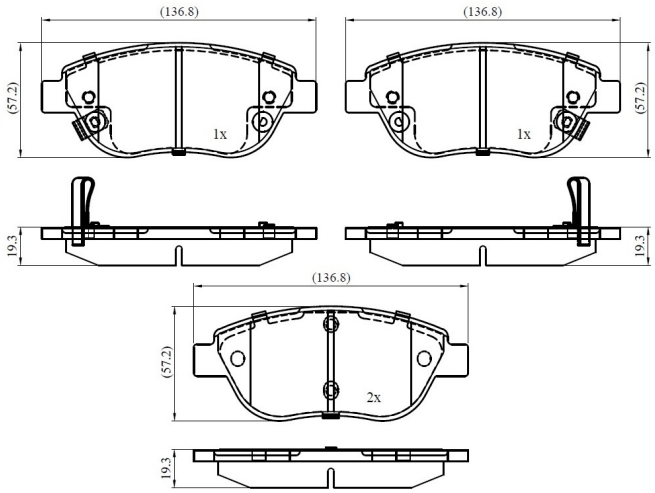

Specifications

Fitting Position	:	Front
Model Date	:	09/12-
Or. Caliper	:	Bosch

WVA	:	25255, 25256,25257, 24549,23981, 25802,23710, 23708
FMSI	:	
Length	:	136.8
Width	:	57.2
Thickness	:	19.3