Make: FIAT

Model: 850

Part Number: ADB0243

Vehicle Manufacturing/Engine:

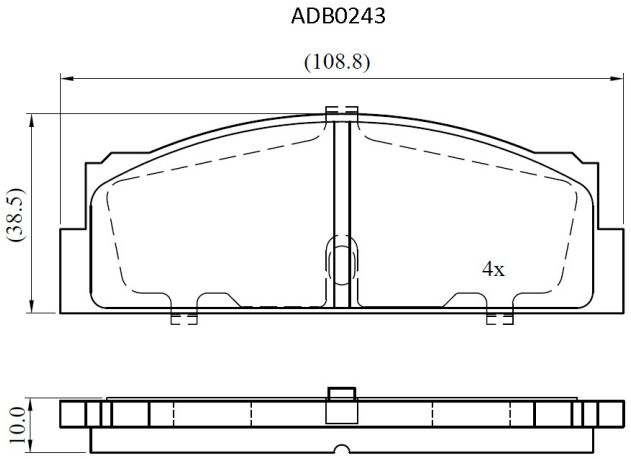

Specifications

Fitting Position	:	Rear
Model Date	:	01/68-01/72
Or. Caliper	:	Bendix
WVA	:	20074

FMSI	:	
Length	:	108.75
Width	:	38.5
Thickness	:	10