Make: FIAT

Model: Brava/Bravo

Part Number: ADB01012

Vehicle Manufacturing/Engine:

ADB01012

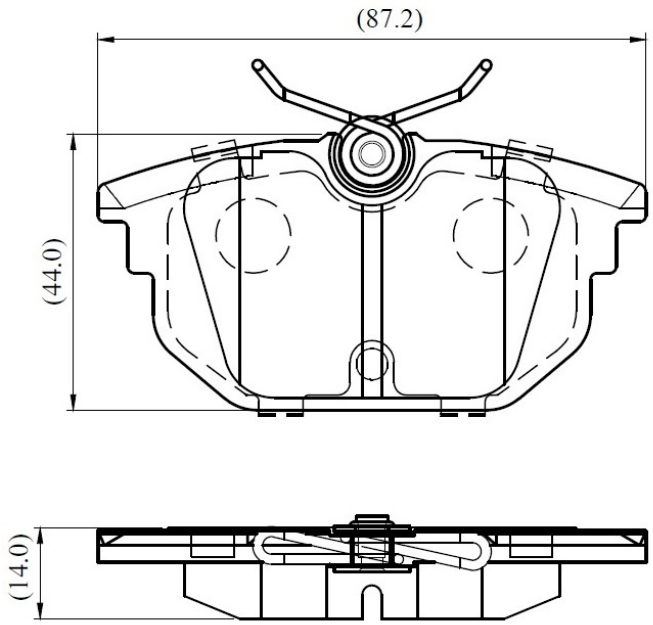

Specifications

Fitting Position	:	Rear
Model Date	:	09/98->
Or. Caliper	:	Lucas
WVA	:	23177
FMSI	:	
Length	:	87.2
Width	:	44
Thickness	:	14