**Make: FIAT**

**Model: Coupe**

**Part Number: ADB01012**

**Vehicle Manufacturing/Engine:**

**ADB01012**

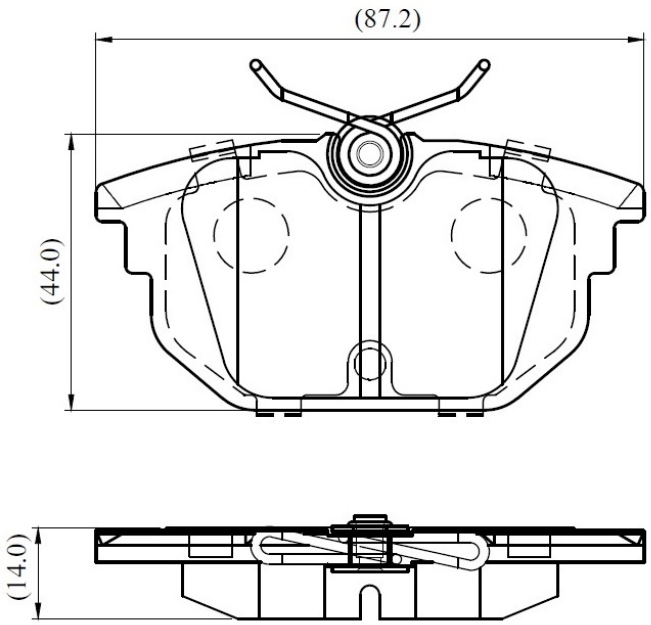


**Specifications**

| | | |
|---|---|---|
| **Fitting Position** | : | Rear |
| **Model Date** | : | 04/98-> |
| **Or. Caliper** | : | Lucas |
| **WVA** | : | 23177 |
| **FMSI** | : | |
| **Length** | : | 87.2 |
| **Width** | : | 44 |
| **Thickness** | : | 14 |