## Make: FIAT

## Model: Doblo Cargo

## Part Number: ADB13244

## Vehicle Manufacturing/Engine:

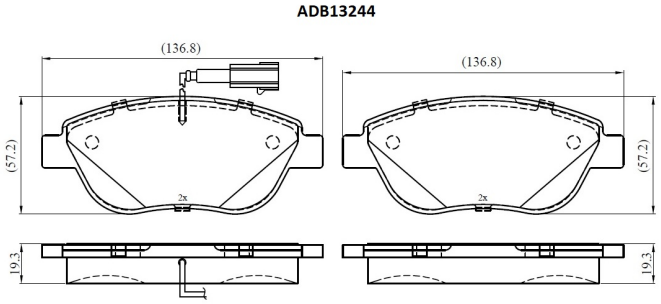


### Specifications

| | | |
|---|---|---|
| **Fitting Position** | : | Front |
| **Model Date** | : | 2010- |
| **Or. Caliper** | : | |
| **WVA** | : | 23709 |
| **FMSI** | : | |

| | | |
|---|---|---|
| **Length** | : | 136.8 |
| **Width** | : | 57.2 |
| **Thickness** | : | 19.3 |