Make: FIAT

Model: DOBLO MPV

Part Number: ADB11037

Vehicle Manufacturing/Engine:

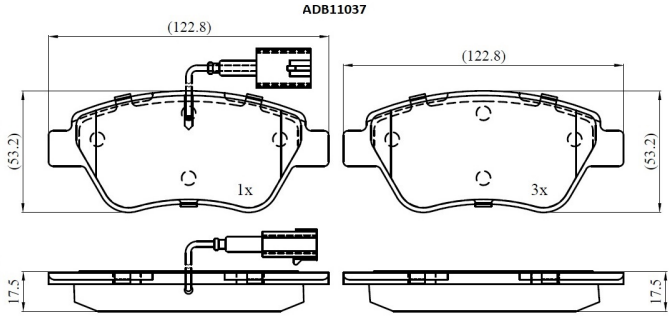

Specifications

Fitting Position	:	Front
Model Date	:	2005-
Or. Caliper	:	
WVA	:	23705
FMSI	:	
Length	:	122.8

Width	:	53.2
Thickness	:	17.5