Make: FIAT

Model: Doblo

Part Number: ADB01783

Vehicle Manufacturing/Engine:

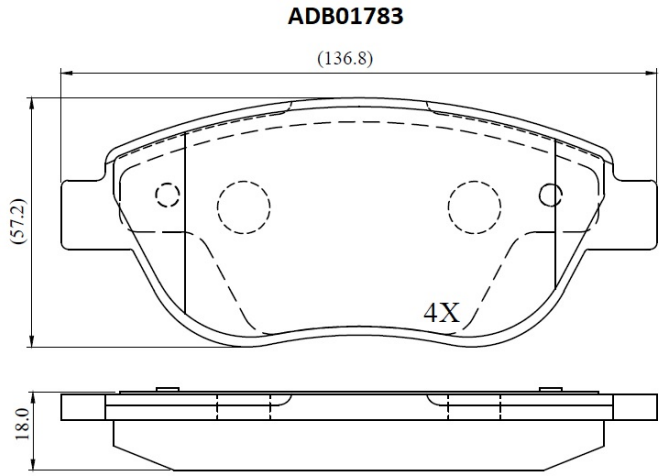

Specifications

Fitting Position	:	Front
Model Date	:	12/05-01/10
Or. Caliper	:	Bosch

WVA	:	23708
FMSI	:	
Length	:	136.8
Width	:	57.2
Thickness	:	18