Make: FIAT

Model: Doblo

Part Number: ADB12032

Vehicle Manufacturing/Engine:

ALLIED NIPPON PRIVATE LIMITED
(Formerly known as Allied Nippon Ltd.)
CIN : U34300DL1988PTC030910

ADB12032

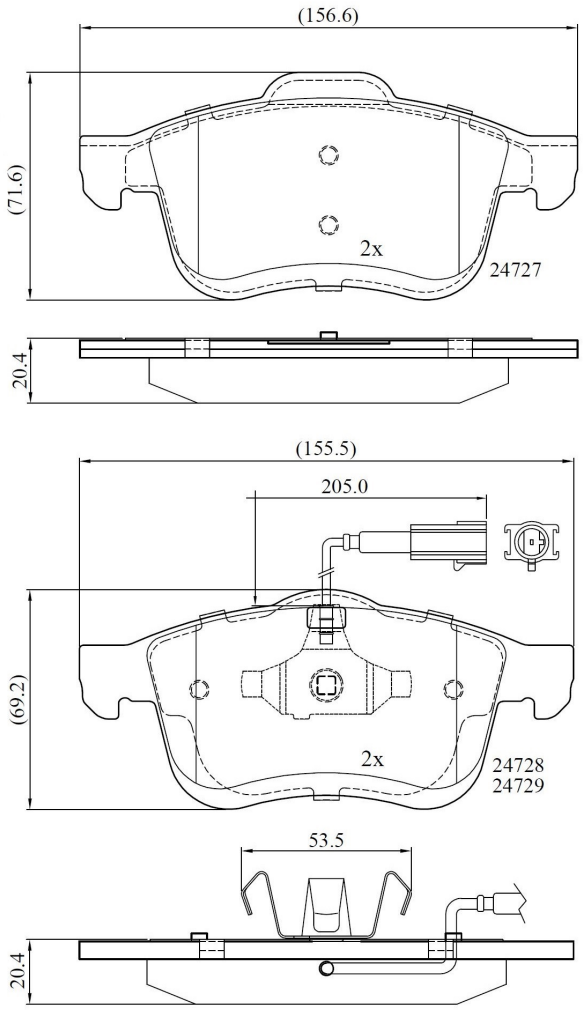

Specifications

Fitting Position	:	Front
Model Date	:	02/10-
Or. Caliper	:	ATE -Teves
WVA	:	24727, 24728, 24729
FMSI	:	
Length	:	155.0/156.3
Width	:	69.0/71.8
Thickness	:	20.4