Make: FIAT

Model: Fullback Pickup

Part Number: ADB32378

Vehicle Manufacturing/Engine:

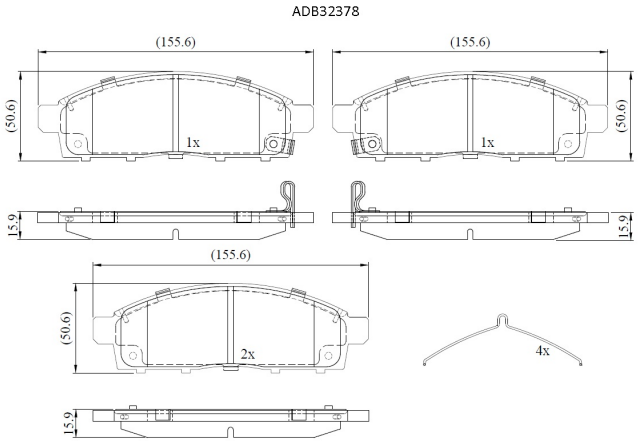

Specifications

Fitting Position	:	Front
Model Date	:	01/2016-
Or. Caliper	:	
WVA	:	

FMSI	:	
Length	:	155.6
Width	:	50.6
Thickness	:	15.9