Make: FIAT

Model: Marea

Part Number: ADB1479

Vehicle Manufacturing/Engine:

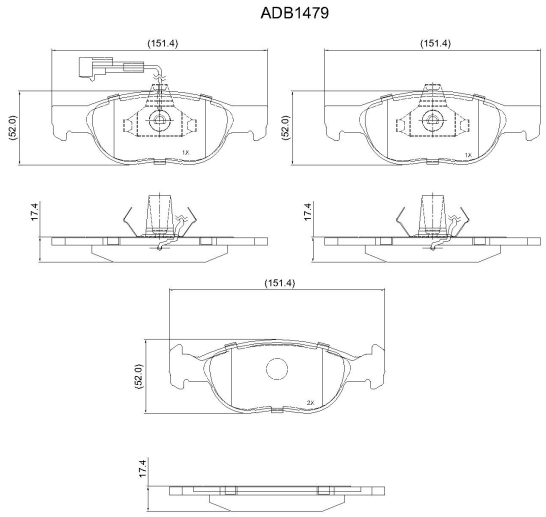

Specifications

Fitting Position	:	Front
Model Date	:	01/96->
Or. Caliper	:	Ate

WVA	:	21930
FMSI	:	
Length	:	151.4
Width	:	52
Thickness	:	17.4