Make: FIAT

Model: Palio

Part Number: ADB1201

Vehicle Manufacturing/Engine:

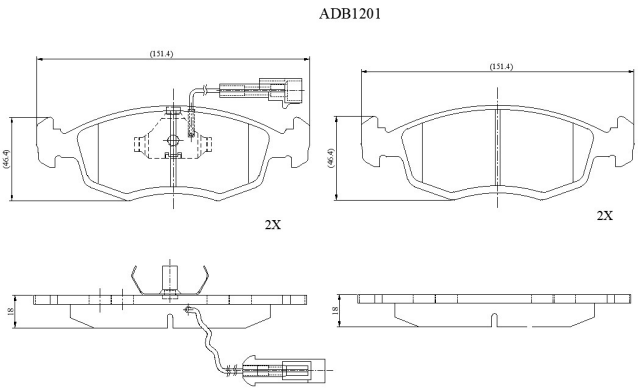

Specifications

Fitting Position	:	Front
Model Date	:	10/99->
Or. Caliper	:	Ate
WVA	:	23227
FMSI	:	

Length	:	151.4
Width	:	46.4
Thickness	:	18