Make: FIAT

Model: Palio

Part Number: ADB11295

Vehicle Manufacturing/Engine:

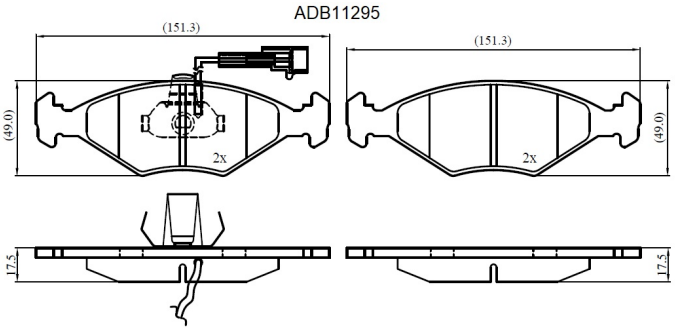

Specifications

Fitting Position	:	Front
Model Date	:	10/99->
Or. Caliper	:	
WVA	:	23220
FMSI	:	
Length	:	151.3

Width	:	49
Thickness	:	17.5