Make: FIAT

Model: Punto EVO

Part Number: ADB12044

Vehicle Manufacturing/Engine:

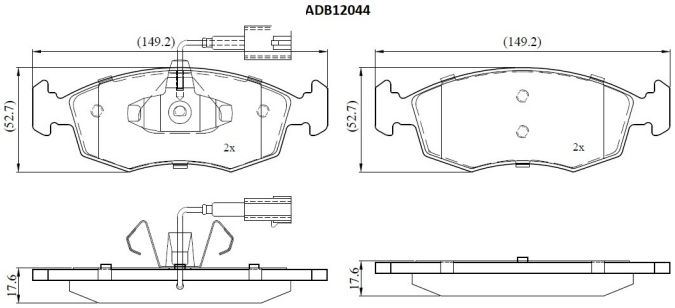

Specifications

Fitting Position	:	Front
Model Date	:	10/09-
Or. Caliper	:	ATE
WVA	:	23229, 20907
FMSI	:	
Length	:	149.2

Width	:	52.7
Thickness	:	17.6