Make: FIAT

Model: SCUDO Bus

Part Number: ADB13273

Vehicle Manufacturing/Engine:

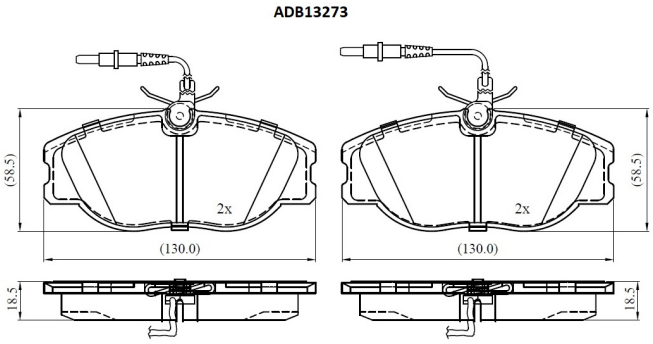

Specifications

Fitting Position	:	Front
Model Date	:	1999-2006
Or. Caliper	:	
WVA	:	21801
FMSI	:	
Length	:	130

Width	:	58.5
Thickness	:	18.5