Make: FIAT

Model: Stilo

Part Number: ADB01039

Vehicle Manufacturing/Engine:

ADB01039

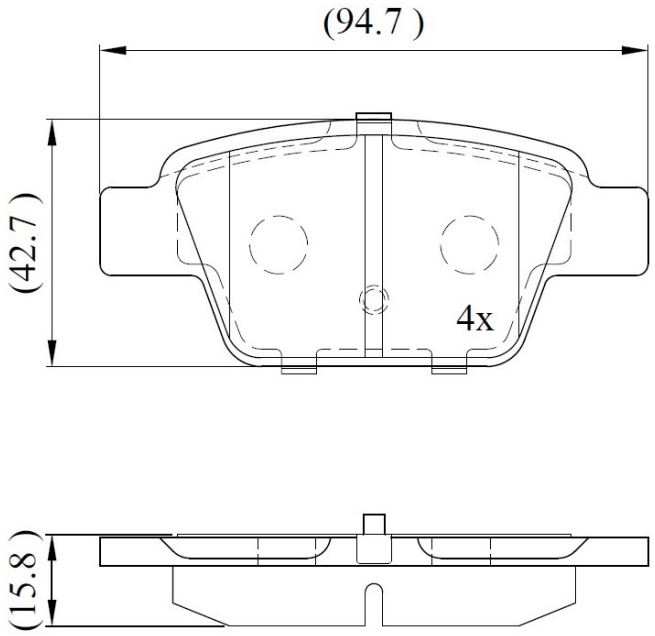

Specifications

Fitting Position	:	Rear
Model Date	:	11/01->
Or. Caliper	:	Bosch
WVA	:	23714
FMSI	:	
Length	:	94.7
Width	:	42.7
Thickness	:	15.8