Make: FIAT

Model: Uno

Part Number: ADB1142

Vehicle Manufacturing/Engine:

ADB1142

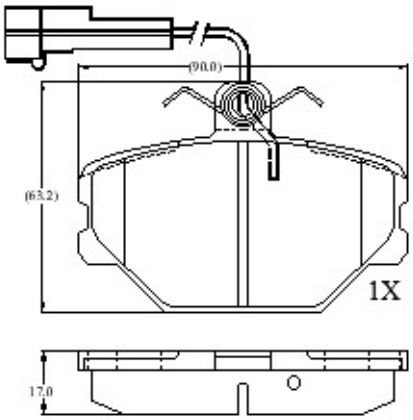

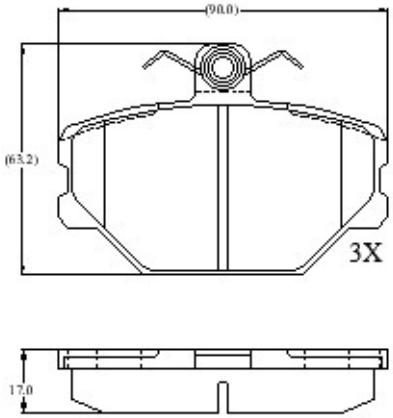

Specifications

Fitting Position	:	Front
Model Date	:	01/83-01/95
Or. Caliper	:	Locus
WVA	:	21100
FMSI	:	
Length	:	90
Width	:	63.2
Thickness	:	17