Make: FIAT

Model: Uno

Part Number: ADB4129

Vehicle Manufacturing/Engine:

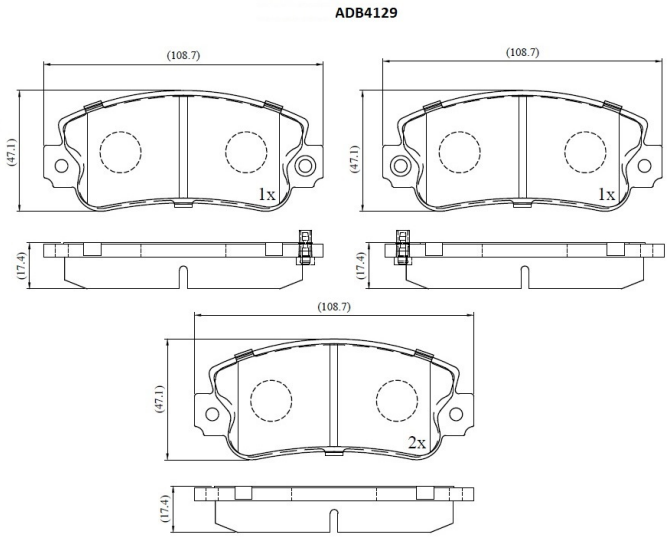

Specifications

Fitting Position	:	Front
Model Date	:	01/83-01/95
Or. Caliper	:	Bendix

WVA	:	20950
FMSI	:	
Length	:	108.8
Width	:	47.1
Thickness	:	18