Make: FORD

Model: Escort 90 Van (Mk V - Mk III)

Part Number: ADB3393

Vehicle Manufacturing/Engine:

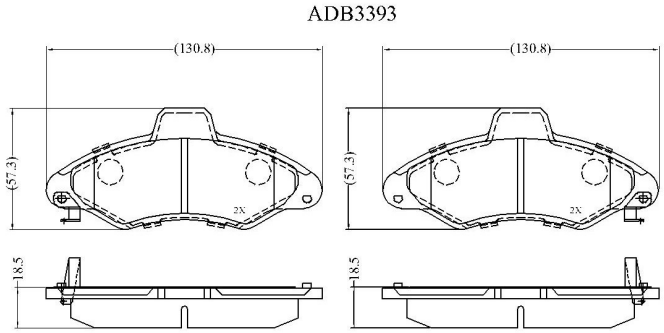

Specifications

Fitting Position	:	Front
Model Date	:	10/96-10/98
Or. Caliper	:	Bendix
WVA	:	23300
FMSI	:	

Length	:	130.8
Width	:	57.4
Thickness	:	18.5