Make: FORD

Model: FOCUS I Turnier

Part Number: ADB02914

Vehicle Manufacturing/Engine:

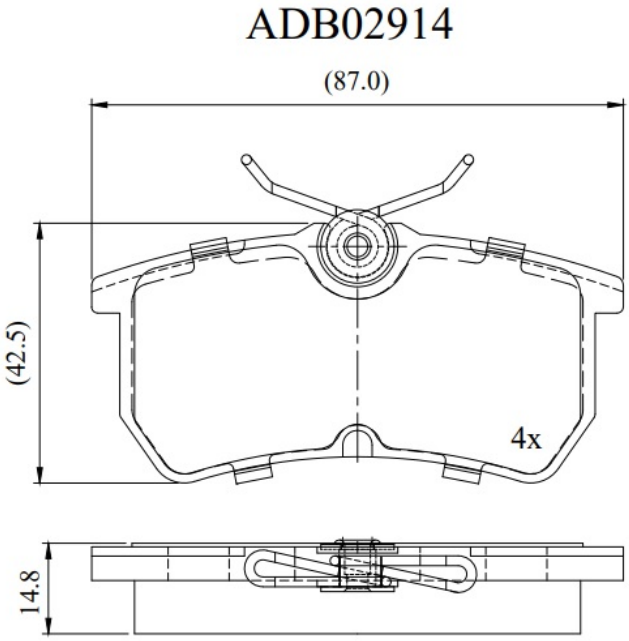

Specifications

Fitting Position	:	Rear

Model Date	:	1999-2004
Or. Caliper	:	
WVA	:	23353
FMSI	:	
Length	:	87
Width	:	42.5
Thickness	:	14.8