## Make: FORD

## Model: FOCUS IV

## Part Number: ADB32462

## Vehicle Manufacturing/Engine:

ADB32462

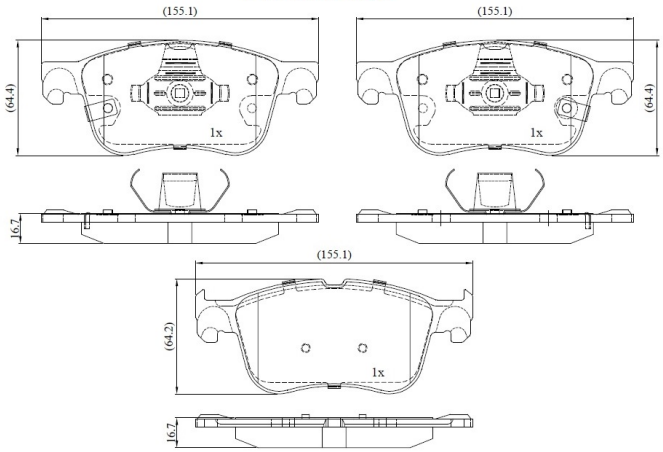


### Specifications

| | | |
|---|---|---|
| **Fitting Position** | : | Front |
| **Model Date** | : | 2018- |
| **Or. Caliper** | : | |

| | | |
|---|---|---|
| **WVA** | : | 20,55,62,05,58,20,559 |
| **FMSI** | : | |
| **Length** | : | 155.3 |
| **Width** | : | 64.3 |
| **Thickness** | : | 16.7 |