Make: FORD

Model: GALAXY I

Part Number: ADB13252

Vehicle Manufacturing/Engine:

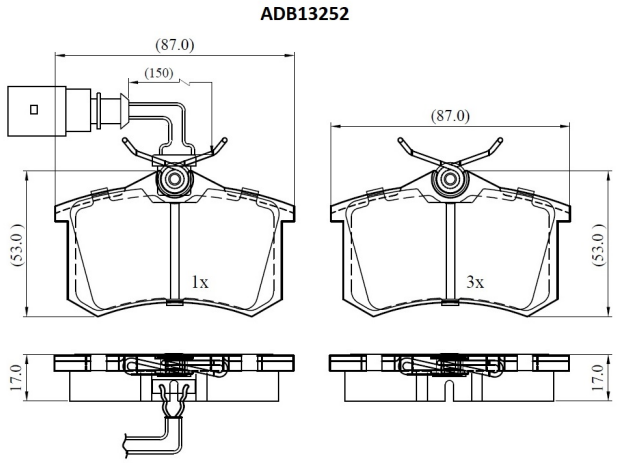

Specifications

Fitting Position	:	Rear
Model Date	:	1997-2006
Or. Caliper	:	

WVA	:	23554
FMSI	:	
Length	:	87
Width	:	53
Thickness	:	17