Make: FORD

Model: Granada/ Scorpio (85->95)

Part Number: ADB0139

Vehicle Manufacturing/Engine:

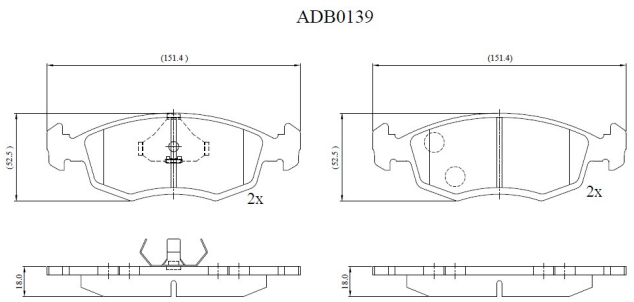

Specifications

Fitting Position	:	Front
Model Date	:	05/92-01/95
Or. Caliper	:	Ate
WVA	:	20907
FMSI	:	

Length	:	151.4
Width	:	52.5
Thickness	:	18