Make: FORD

Model: KUGA III

Part Number: ADB32462

Vehicle Manufacturing/Engine:

ADB32462

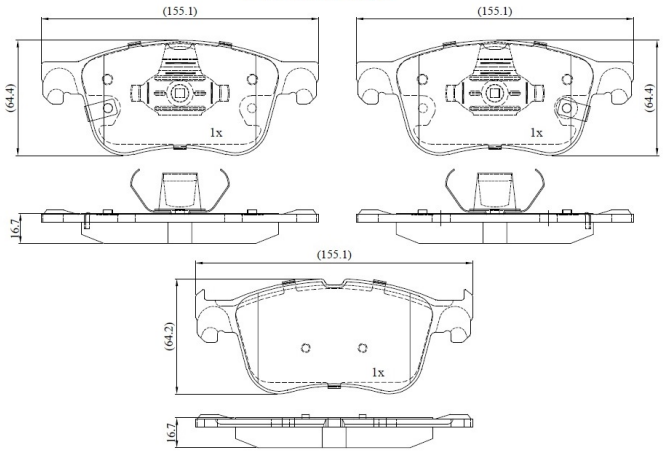

Specifications

Fitting Position	:	Front
Model Date	:	2019-
Or. Caliper	:	

WVA	:	20,55,62,05,58,20,559
FMSI	:	
Length	:	155.3
Width	:	64.3
Thickness	:	16.7