Make: FORD

Model: Mondeo->10/00

Part Number: ADB0470

Vehicle Manufacturing/Engine:

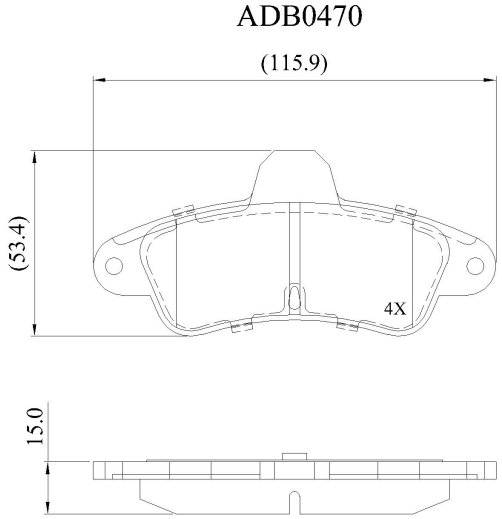

Specifications

Fitting Position	:	Rear
Model Date	:	01/93-10/00
Or. Caliper	:	Bendix

WVA	:	21586
FMSI	:	
Length	:	115.9
Width	:	53.4
Thickness	:	15