Make: FORD

Model: Mondeo->10/00

Part Number: ADB01110

Vehicle Manufacturing/Engine:

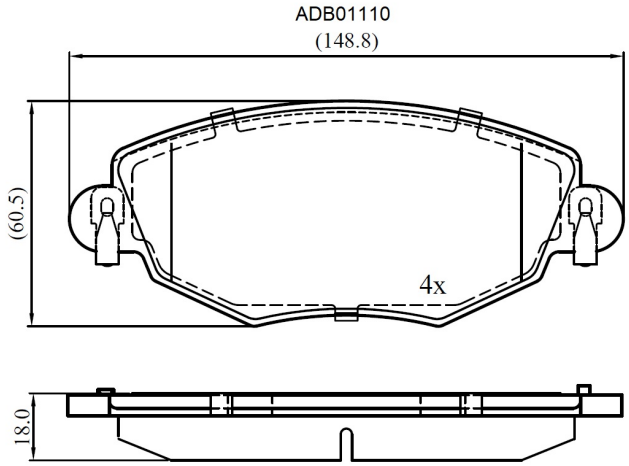

Specifications

Fitting Position	:	Front
Model Date	:	10/00->
Or. Caliper	:	Bosch
WVA	:	23279

FMSI	:	
Length	:	148.8
Width	:	57.5
Thickness	:	17.8