Make: FORD

Model: Mondeo->10/00

Part Number: ADB01114

Vehicle Manufacturing/Engine:

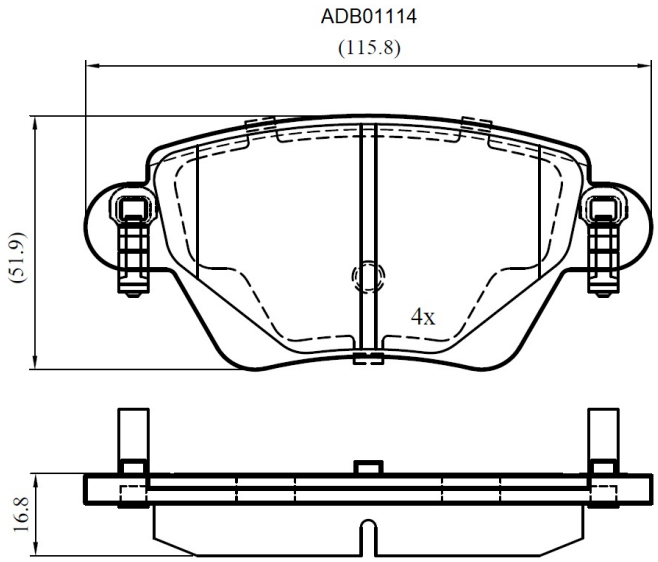

Specifications

Fitting Position	:	Rear
Model Date	:	10/00->

Or. Caliper	:	Bosch
WVA	:	23557
FMSI	:	
Length	:	115.4
Width	:	49
Thickness	:	16.8