Make: FORD

Model: S-MAX

Part Number: ADB33236

Vehicle Manufacturing/Engine:

ADB33236

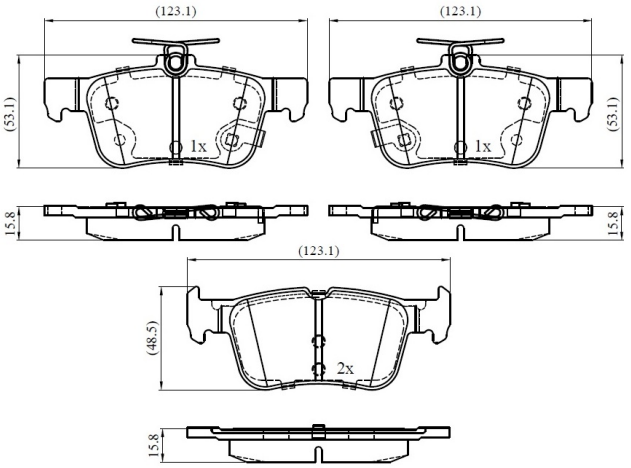

Specifications

Fitting Position	:	Rear
Model Date	:	2015-2018

Or. Caliper	:	
WVA	:	22231
FMSI	:	
Length	:	123.1
Width	:	53.1/48.5
Thickness	:	15.8