Make: FORD

Model: Transit

Part Number: ADB22876

Vehicle Manufacturing/Engine:

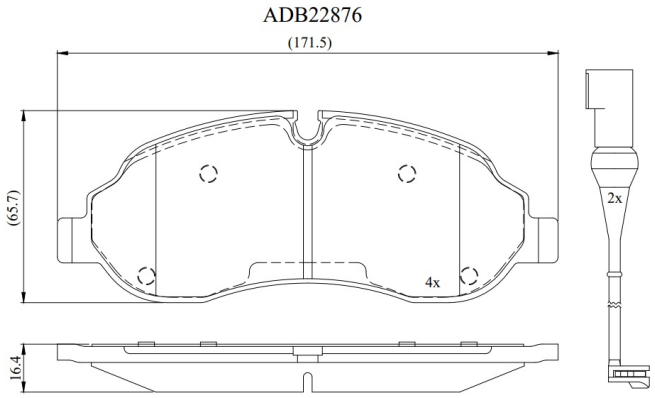

Specifications

Fitting Position	:	Front
Model Date	:	15-
Or. Caliper	:	
WVA	:	
FMSI	:	9004-D1774

Length	:	171.5
Width	:	65.7
Thickness	:	16.4