Make: GMC

Model: Truck Acadia

Part Number: ADB32810

Vehicle Manufacturing/Engine:

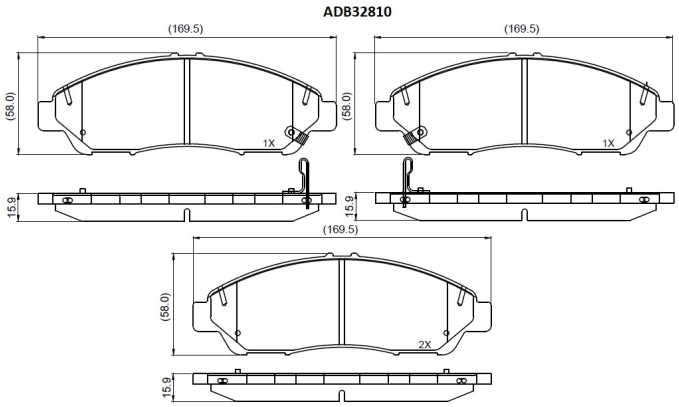

Specifications

Fitting Position	:	Front
Model Date	:	2017-
Or. Caliper	:	
WVA	:	
FMSI	:	9124-D1896

Length	:	169.5
Width	:	58
Thickness	:	16.9