Make: GMC

Model: TRUCK Yukon

Part Number: ADB32480

Vehicle Manufacturing/Engine:

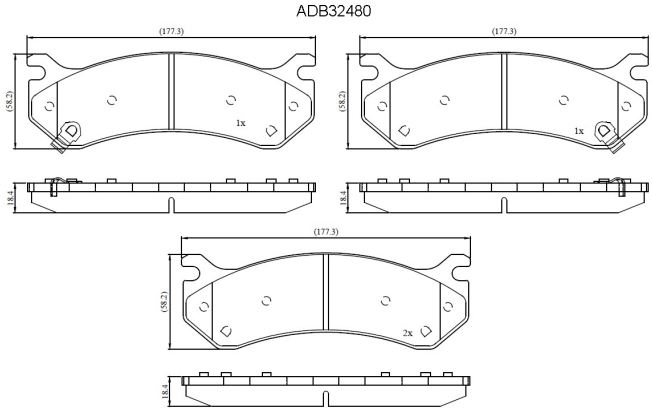

Specifications

Fitting Position	:	Front
Model Date	:	2000-2006
Or. Caliper	:	
WVA	:	
FMSI	:	D785

Length	:	177.3
Width	:	59.2
Thickness	:	18.4