Make: HONDA

Model: Civic (11/99->)

Part Number: ADB3445

Vehicle Manufacturing/Engine:

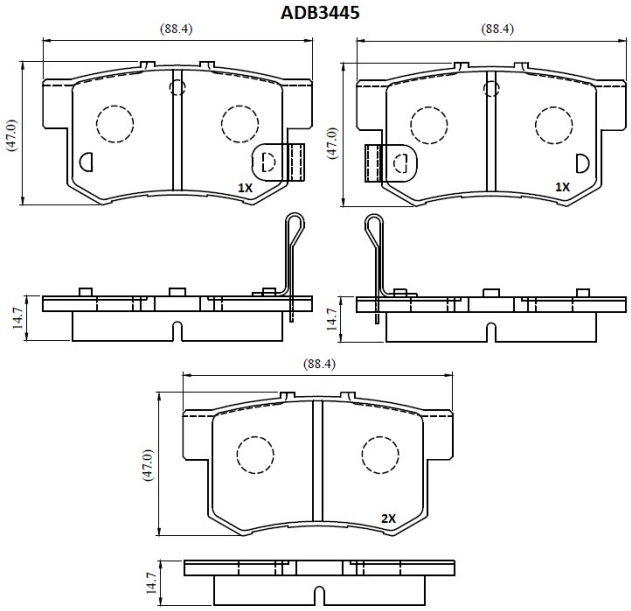

Specifications

Fitting Position	:	Rear
Model Date	:	11/99->

Or. Caliper	:	Akebono
WVA	:	23652
FMSI	:	
Length	:	88.4
Width	:	47
Thickness	:	14.7