Make: HONDA

Model: Civic (->84)

Part Number: ADB0123

Vehicle Manufacturing/Engine:

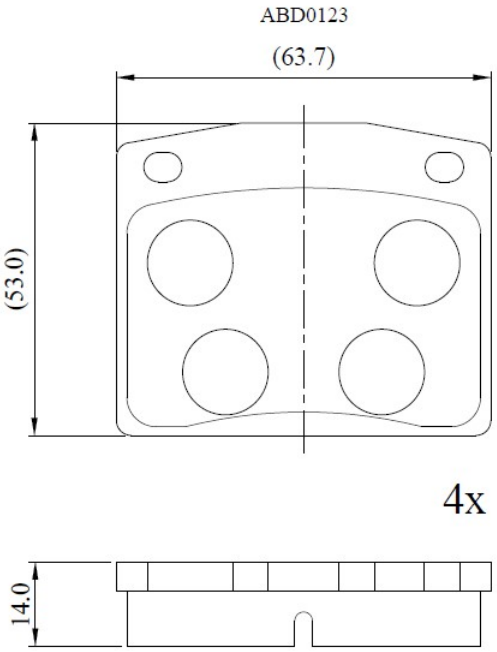

Specifications

Fitting Position	:	Front
Model Date	:	01/75-01/79
Or. Caliper	:	Sumitomo
WVA	:	20485
FMSI	:	
Length	:	63.5
Width	:	53
Thickness	:	14