Make: HONDA

Model: CIVIC X Hatchback

Part Number: ADB32407

Vehicle Manufacturing/Engine:

ADB32407

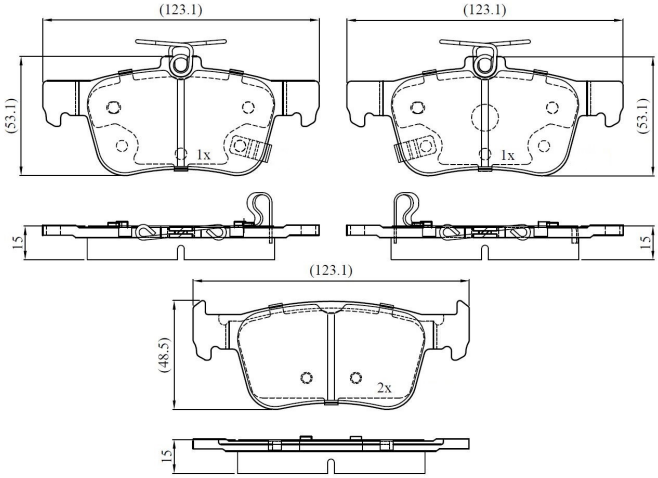

Specifications

Fitting Position	:	Rear
Model Date	:	2017-
Or. Caliper	:	

WVA	:	22429
FMSI	:	
Length	:	123.1
Width	:	48.5,53.1
Thickness	:	15