Make: HONDA

Model: CRX

Part Number: ADB32609

Vehicle Manufacturing/Engine:

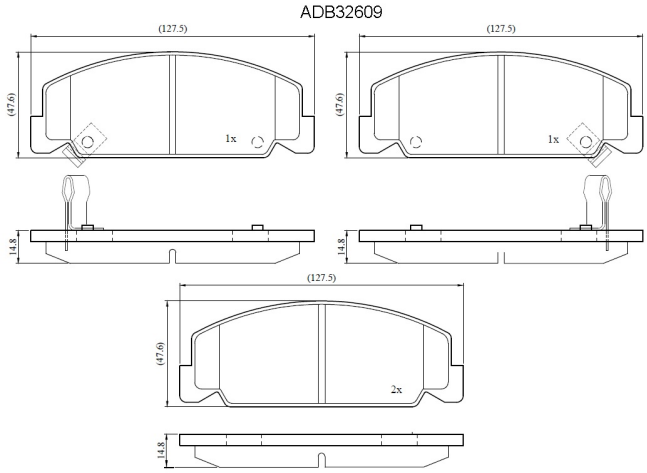

Specifications

Fitting Position	:	Front
Model Date	:	88-91
Or. Caliper	:	
WVA	:	

FMSI	:	D273
Length	:	
Width	:	
Thickness	:	