Make: HYUNDAI

Model: Elantra

Part Number: ADB3805

Vehicle Manufacturing/Engine:

ADB3805

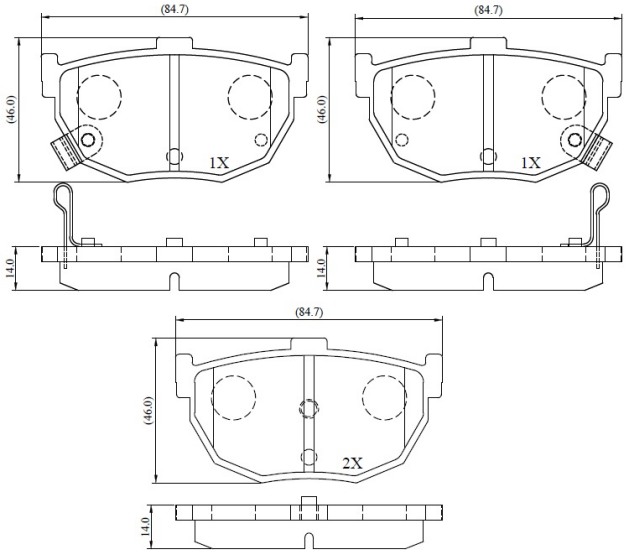

Specifications

Fitting Position	:	Rear
Model Date	:	03/01->

Or. Caliper	:	Sumitomo
WVA	:	21553
FMSI	:	
Length	:	84.7
Width	:	46
Thickness	:	14